LED STRIP SPECIFICATION

2835 DC12V 132LED 2PIN 10MM WHITE LED STRIP SPECIFICATION

Product Model：2835-dc12v-132led-2pin-10mm-w

PART 1 Product Specification

Electrical & Optical Parameters

Parameter	Value
Input Voltage	*DC 12V*
Current	*1.33 A/m*
Working Power	*16 W/m*
PCB Width	*10 mm*
Cut Length	*22.7 mm (3 LEDs)*
LED Type	*SMD2835*
LED Quantity	*132 LEDs/m*
LED Color	*1800K – 10000K*
Beam Angle	*120°*
Luminance	*1440 – 1600 Lm/m*
CRI (Ra)	*> 80*
Working Temperature	*-40 °C – +60 °C*
Storage Temperature	*-40 °C – +60 °C*
Waterproof Rating	*IP20/IP65/IP66/IP68*
Lifespan	*> 50 000 hours*

PART 2 Product Dimensions

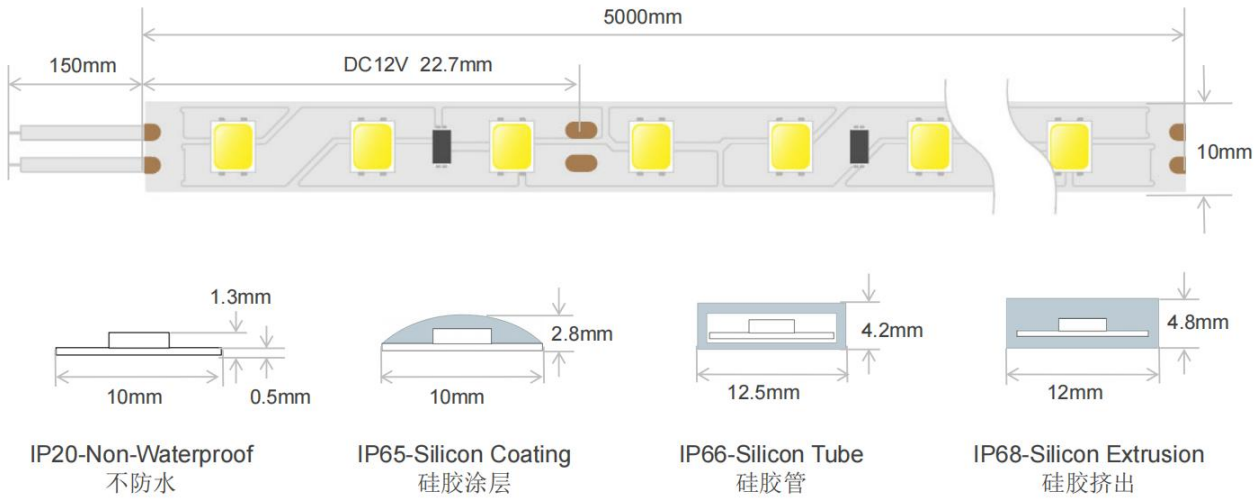

PART 3 Color Standard

Color Temperature Reference

< 2200K	2700K	3000K	4000K	6000K	> 8000K
Super Warm White	**Warm White**	**Warm White**	**Natural White**	**White**	**Cold White**
Candlelight	*HPS Lamp*	*Halogen / Incandescent*	*Metal Halide*	*Pure White*	*Daylight*

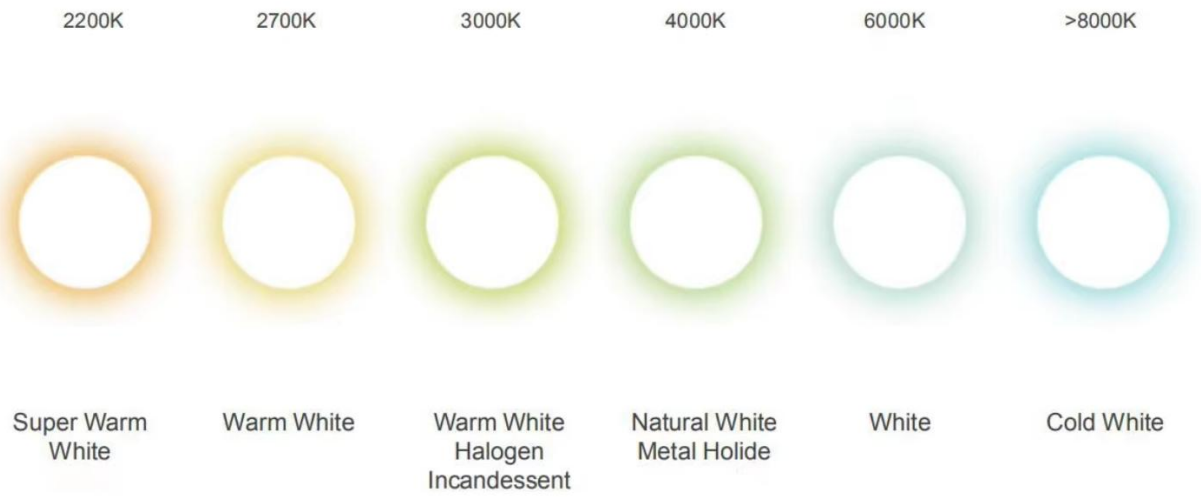

Only one Bin LED is used for each order. The same Bin is maintained in subsequent orders to ensure colour consistency across batches.

PART 4 Production Application

PART 5 Wiring Diagram

1. Connection method one/接线方式一

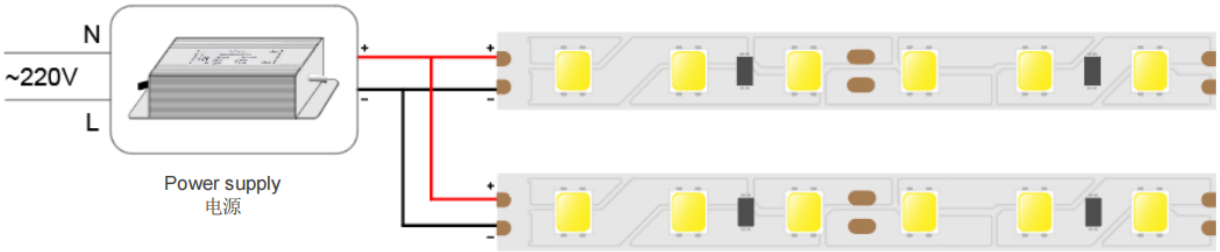

2. Connection method two/接线方式二

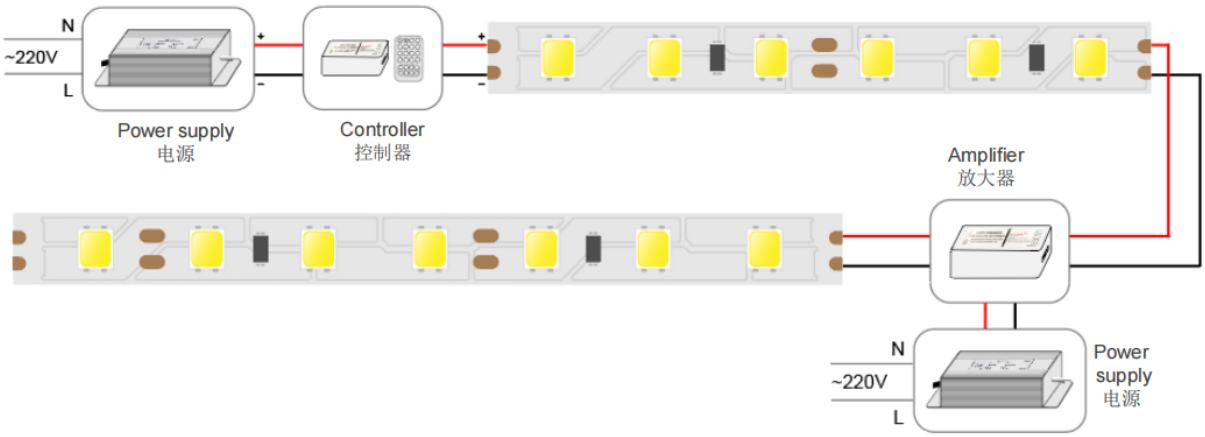

PART 6 Precautions

☐Please cut it according to the cutting line, do not cut it at other positons.

☐Please make sure the wall is dry and free of dust before pasting.

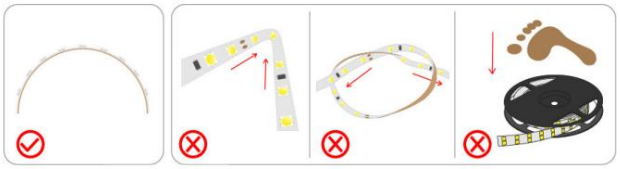

☐ Do not fold, twist or step on the led strips.

☐The LED strip wire ends cannot be shorted together.

PART 7 Product Accessories

Power Supply

Connector

Weldless Connector

Controller

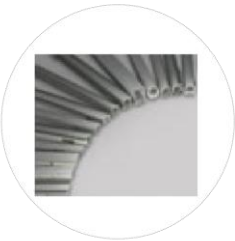

Aluminum profile

➢ Please purchase the above accessories according to your demand.

PART 8 Packaging Instructions

- Standard: 5m/roll, custom lengths supported
- No heavy stacking / stepping on cartons
- Check goods first if outer box damaged before signing